Bu çizim TÜRASAŞ'ın yazılı izni olmadan herhangi bir amaç için ÇOĞALTILAMAZ veya KULLANILAMAZ.

OPTICAL

Without external losses				
Marker light	Luminous Intensity (Cd) Optical Axis		Luminous Intensity (Cd) @ +4°-40°	
Full mode	max.	700	max.	40
	min.	300	min.	15
Dimmed mode	max.	300	max.	40
	min.	100	min.	3

Without external losses				
Tail light	Luminous Intensity (Cd) Optical Axis		Luminous Intensity (Cd) @ +4-2.5° vertical @ +4-7.5° horizontal	
EN15153-1 2013	max.	100	max.	100
	min.	15	min.	8

Color of marker	CIE (1931) chromaticity coordinates of the intersection points						
	Point	I	J	J'	K'	K	L
White	X	0.310	0.440	0.650	0.520	0.440	0.310
	Y	0.348	0.432	0.440	0.382	0.382	0.283

Color of tail light	CIE (1931) chromaticity coordinates of the intersection points				
	Point	A	B	D	C
Red	X	0.675	0.655	0.721	0.735
	Y	0.305	0.305	0.259	0.265

Ce produit est conforme EN15153-1:2013 et TSI LocPass:2014 sans verrine client supplémentaire.
This product is compliant with EN15153-1:2013 and TSI LocPass:2014 without external losses.

Electrical characteristics

Functions	
Power supply voltage	17->130VDC
Max power consumption for marker light	11W
Max power consumption for tail light	4W

Status feedback signal	
Max switching voltage	220VDC
Max switching current	200mA

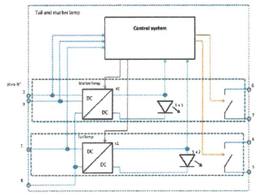

Wire N°	Function	Pin N°
1	Tail lamp	A
2	Full mode marker lamp	B
3	Dimmed mode marker lamp	C
4	Potential free feedback for tail lamp 1	D
5	Potential free feedback for tail lamp 2	E
6	Potential free feedback for marker lamp 1	F
7	Potential free feedback for marker lamp 2	G
8	0V	H

PANEL CUTOUT
Front view

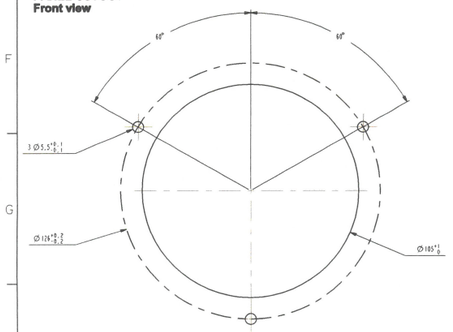

Fixing by 3 screws M5 (recommanded by MAFELEC)
Screws and nuts are not provided by MAFELEC

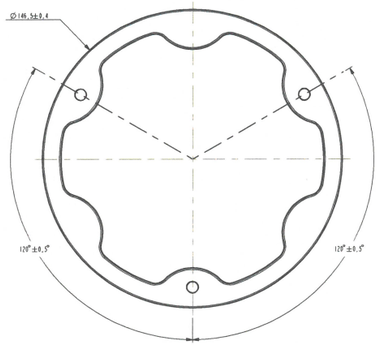

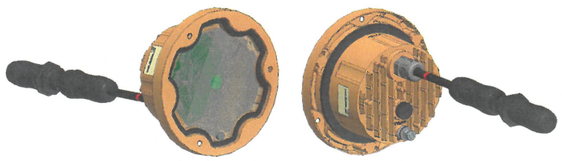

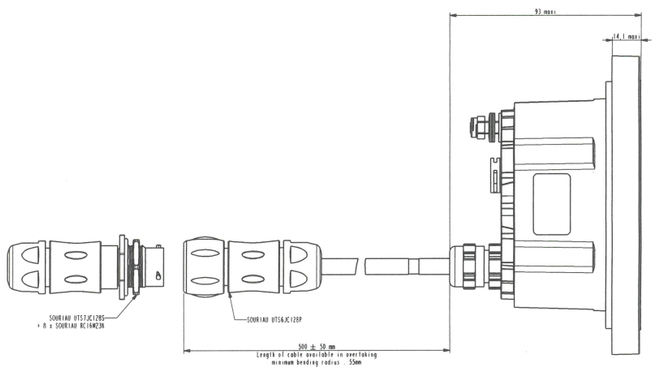

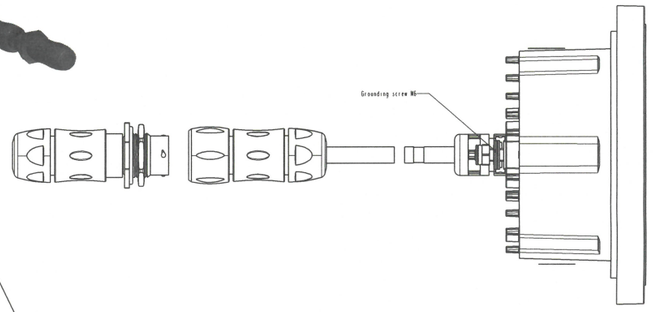

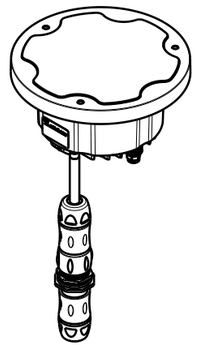

LABELS :

Identification labels printing

MAFELEC France
YSP2652
ind Date/code

MAFELEC France
YSP2652 ind
N°serie Date/code
DATAMATRIX

Serial test procedure:
GC 17/23

PROTECTION

- Product alone: IP65
- Product bonding on customer's panel cutout: no requirement

Recommended tightening torque:
1.5Nm for screw M5
3Nm for screw M6

Weight: 1.2 Kg +/- 5%

Configuration	Front mounting
Optical standard	EN15153-1:2013 and TSI LocâPass
Customer attenuation	0%
Cover windows	Polycarbonate

Connecteur MA00203 et les 8 contacts BC16M23A
dans un socket plastique associé au projecteur

Rep	Référence	Qté	Désignation
1	PHADARMAARRAAMR	1	Lower Marker light Ø120 24V to 110V (Un)

Version	Nom	Date	Modifications
B.2	J.CARLE	29/09/2020	Connector UT56JC128S remplaced by UT57JC128S
A.2	J.CARLE	30/07/2020	Connector UT57JC128S remplaced by UT56JC128S
A.1	J.CARLE	01/07/2020	Création

Référence Plan	Désignation
YSP2652	Lower Marker light Ø120 24V to 110V (Un)

Créé par : Julien CARLE	Date : 29-09-20	Version : B.2	Cycle de vie : En exploitation	Echelle : 1:1	Format : A1	Feuille : 1 / 1
Modifié par : Julien CARLE	Modifié le : 29-09-20					

CE PLAN EST LA PROPRIETE DE LA SOCIETE MAFELEC, SA REPRODUCTION, PAR QUELQUE PROCEDE QUE CE SOIT, SANS L'AUTORISATION EXPRESSE DE SON PROPRIETAIRE, CONSTITUERAIT UNE CONTREFACON SANCTIONNEE PAR LE CODE PENAL.

Original format A1

	MARKER & TAIL LAMP		ASSY	1,200	xTS250641x
Adet	Parça Adı	Standart No	Malzeme	Birim Ağırlık Kg	Yarı Mamülün Ölçüleri

Bu çizim kritik kalite parametresi içerir mi? Hayır — Kritik kalite parametresi şu şekilde gösterilmiştir. CTQ

Grup No:	Tasnif No:	Toleransı verilmeyen ölçüler için ilgili standartlar: EN 13920 BBF (Kaynaklı yapılar) EN 22768-1m (Uzunluk ve açı ölçüleri) EN 22768-2 K (Şekil ve Konumlar)	**TÜRASAŞ** Türkiye Raylı Sistem Araçları Sanayii A.Ş. Eskişehir Bölge Müdürlüğü
Tip: E5000	Tadilat: A — ÜRAF004S25315 — 24.02.2025 Asuman TONGUL		
Resim: T.AYDIN	28.01.2022	Onay: A.TÖREN	den proje
Kontrol: A.TONGUL		Tarih:	Bu yerine geçti.
Ky Müh.		**MARKER & TAIL LAMP**	Komple Resim/Poz No
Kaynak Parametresi: - - -			
Ölçek: 1:1	Kağıt Ebadı: A3		**001EL0200003-000**

Sayfa 1/1