UNIT mm	PROJECT			

ISSUE	SYN	REVISION	DATE	REVISOR	CHECKED	APPROVED
1	1	NOTE 추가	140303	Park.K.S		
	2					

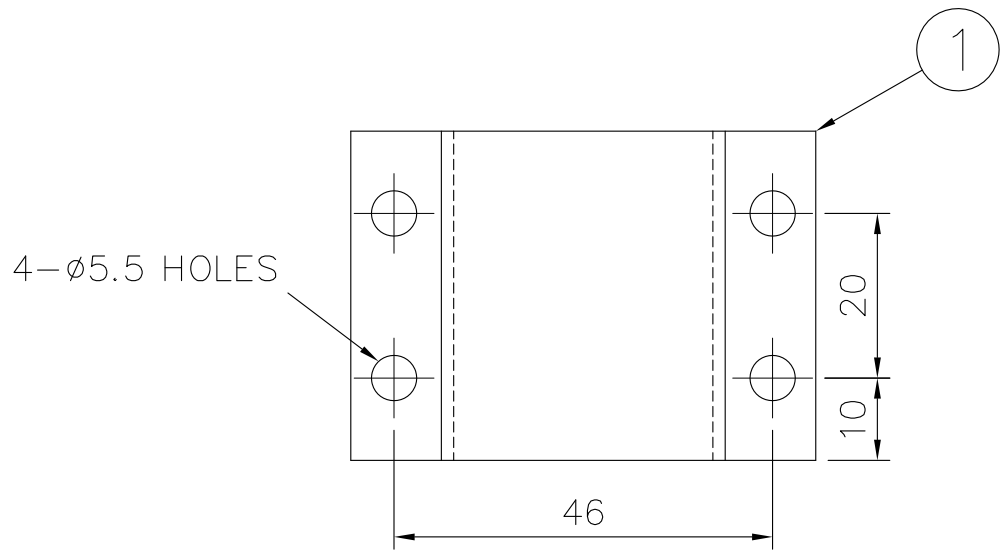

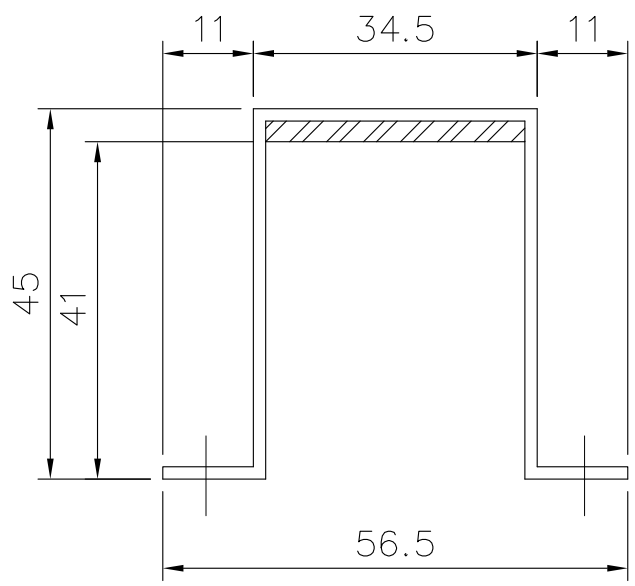

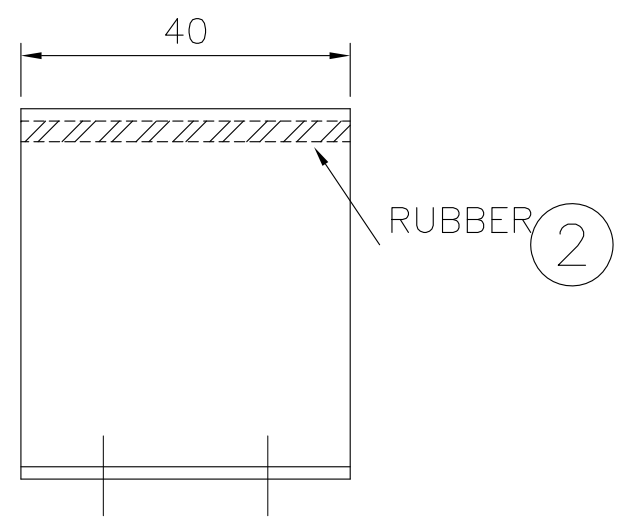

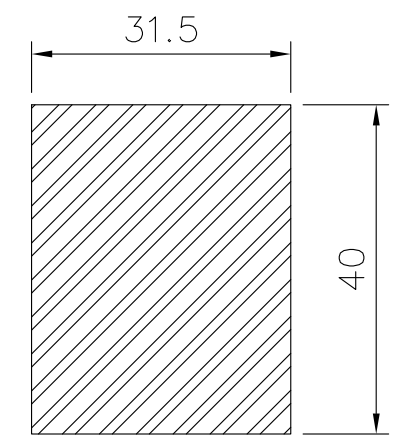

VIEW - 2 (SC=1/1)

NOTE
1. RUBBER bond operations carried out.

NO.	PARTS	DWG. NO	Q'TY	MATERIAL	DESCRIPTION	WT(kg)
2	PACKING	OHQ-D-038-2	1	RUBBER	t=2.5	
1	CHAIN CLAMP	OHQ-D-038-1	1	STS304	t=1.5	

APPROVED		TITLE	CHAIN CLAMP
CHECKED			
DESIGNED		DWG. NO	OHQ-D-038 A1
DRAWN			
SCALE	1/1 T.W	OH SUNG M&E CO.,LTD.	
REF.DRG			