UNIT mm	PROJECT			

ISSUE	SYN	REVISION	DATE	REVISOR	CHECKED	APPROVED
	1					
	2					

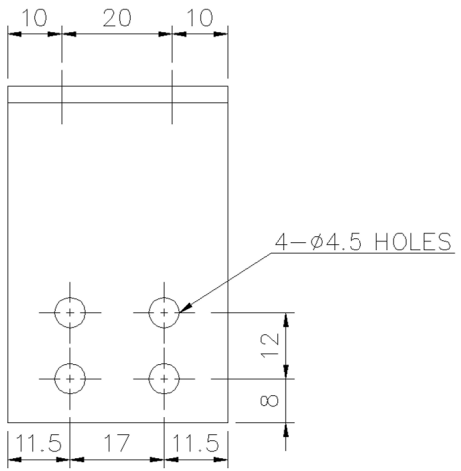

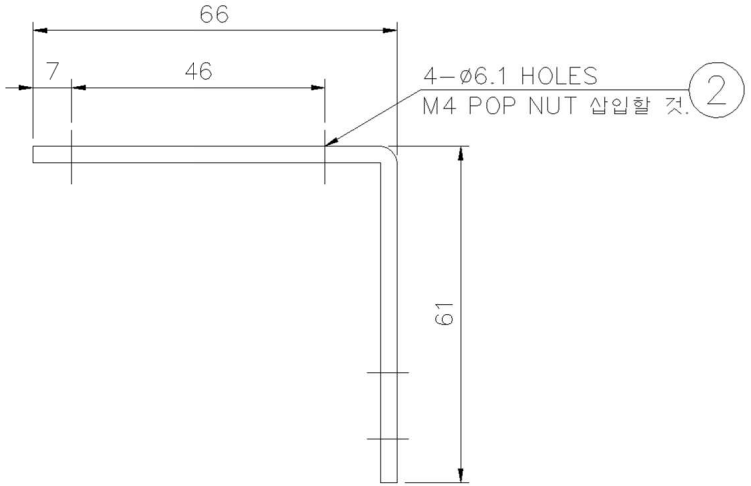

NO.	PARTS	DWG. NO	Q'TY	MATERIAL	DESCRIPTION	WT(kg)
2	POP NUT	OHQ-D-037-2	4	SCP1	M4	
1	CHAIN CLAMP BRACKET	OHQ-D-037-1	1	STS304	t=3.0	

APPROVED		TITLE	CHAIN CLAMP BRACKET
CHECKED			
DESIGNED		DWG. NO	OHQ-D-037 A1
DRAWN			
SCALE	1/1 T.W	OH SUNG M&E CO.,LTD.	
REF.DRG			