적 용 규 격
SPECIFICATION APPLIED

2014. 03. 10.

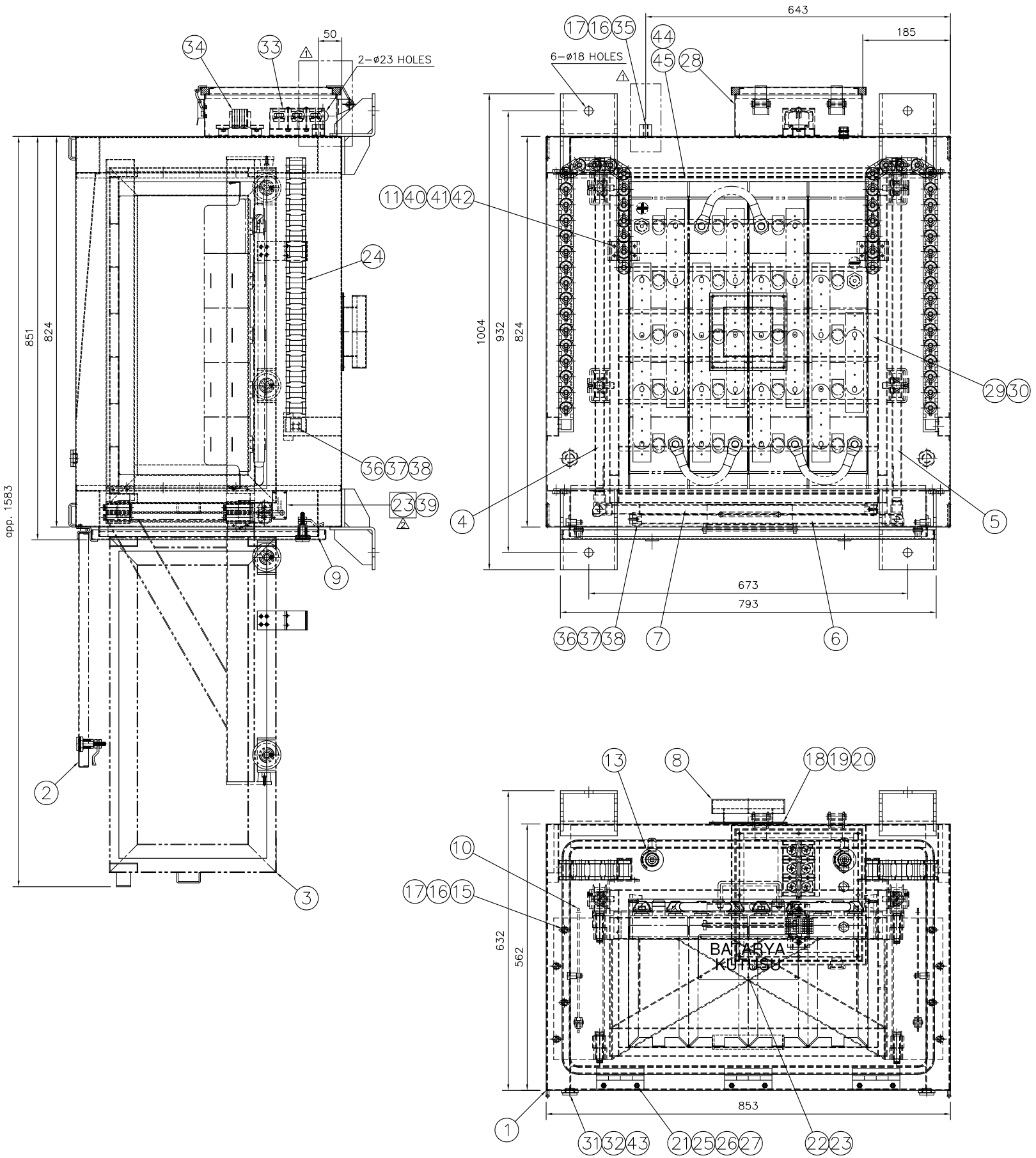

P	BA68A061-000	SILICONE-BLACK	ASS'Y	0.3		SHINETSU
O	BA68A060-000	SILICONE-GREY	ASS'Y	2		SHINETSU
N	BA68A059-000	HEAT-SHRINK TUBE	ASS'Y	16		ø20, 60mm
M	BA68A058-000	HEAT-SHRINK TUBE	ASS'Y	8		ø50, 200mm
L	BA68A057-000	P.V.C HOSE	ASS'Y	4		INTERNAL: ø5 EXTERNAL: ø7, 3500mm
K	BA68A056-000	CABLE TIE	ASS'Y	20		100mm
J	BA68A055-000	CABLE TIE	ASS'Y	40		140mm
I	BA68A054-000	CABLE TIE	ASS'Y	80		200mm
H	BA68A053-000	CABLE TIE	ASS'Y	80		270mm
G	BA68A052-000	SOLDER SLEEVE	ASS'Y	1		ø7
F	BA68A051-000	MARKER SLEEVE	ASS'Y	3		3.2SQ (RAYCHEM)
E	BA68A050-000	MARKER SLEEVE	ASS'Y	2		12.7SQ (RAYCHEM)
D	BA68A049-000	FERRULE (BLUE)	ASS'Y	4		0.5SQ-10mm
C	BA68A048-000	FERRULE (YELLOW)	ASS'Y	2		1.0SQ-10mm
B	BA68A047-000	TERMINAL LUG	ASS'Y	8		50SQ-ø10
A	BA68A046-000	TERMINAL LUG	ASS'Y	8		50SQ-ø8
45	BA68A045-000	PAD	MDF	6		12Tx40x530
44	BA68A044-000	PAD	MDF	2		3Tx40x530
43	OHQ-D-078-3	O-RING	RUBBER	2		2.5Txø21xø16
42	BA68A042-000	PLAIN WASHER	STS304	16		M4
41	BA68A041-000	SPRING WASHER	STS304	16		M4
40	BA68A040-000	R.H SCREW	STS304	16		M4x16
39	BA68A039-000	MAKER NAME PLATE	STS304	2		t=0.8
38	BA68A038-000	PLAIN WASHER	STS304	12		M5
37	BA68A037-000	SPRING WASHER	STS304	12		M5
36	BA68A036-000	R.H SCREW	STS304	12		M5x16
△1 35	BA68A035-000	HEX. BOLT	STS304	1		M8x16
34	BA68A034-000	TERMINAL BLOCK	ASS'Y	1		2002-1301 6P
33	BA68A033-000	TERMINAL BLOCK	ASS'Y	1		KH60150-3P
32	OHQ-D-078-2	DRAIN CAP	STS304	2		.
31	OHQ-D-078-1	SPECIAL NUT	STS304	2		.
30	BA68A030-000	PAD	MDF	3		12Tx40x570
29	BA68A029-000	PAD	MDF	1		3Tx40x570
28	BA68A028-000	TERMINAL BOX	ASS'Y	1		.
27	BA68A027-000	PLAIN WASHER	STS304	6		M6
26	BA68A026-000	SPRING WASHER	STS304	6		M6
25	BA68A025-000	HEX. BOLT	STS304	6		M6x16
24	OHQ-D-064	CABLE CHAIN	ASS'Y	2		.
23	BA68A023-000	RIVET	AL	14		ø2.6
22	BA68A022-000	NAME PLATE	STS304	1		t=0.8
21	BA68A021-000	HINGE	STS304	3		.
20	BA68A020-000	PLAIN WASHER	STS304	4		M5
19	BA68A019-000	SPRING WASHER	STS304	4		M5
18	BA68A018-000	HEX. BOLT	STS304	4		M5x16
△1 17	BA68A017-000	PLAIN WASHER	STS304	~~16~~ 17		M8
△1 16	BA68A016-000	SPRING WASHER	STS304	~~16~~ 17		M8
15	BA68A015-000	HEX. BOLT	STS304	16		M8x20
~~14~~		~~PACKING~~	~~CR~~	~~1~~		~~t=2.0~~
13	BA68A013-000	LOCKING DEVICE	ASS'Y	2		.
~~12~~		~~STOPPER~~	~~ASS'Y~~	~~4~~		~~.~~
11	OHQ-D-038	CHAIN CLAMP	STS304	2		t=1.5
10	OHQ-D-009	COVER GUIDE	STS304	2		t=3.0
9	BA68A009-000	PACKING	EPDM	1		.
8	OHQ-D-013-2	AIR VENT	ASS'Y	1		.
7	BA45A006-000	GUIDE 2 ASS'Y	ASS'Y	1		.
6	BA45A005-000	GUIDE 1 ASS'Y	ASS'Y	1		.
5	BA68A005-000	GUIDE SUPPORT(RIGHT)	ASS'Y	1		.
4	BA68A004-000	GUIDE SUPPORT(LEFT)	ASS'Y	1		.
3	BA68A003-000	BATTERY TRAILER ASS'Y	ASS'Y	1		.
2	BA68A002-000	COVER	STS304	1		t=1.5
1	BA68A001-000	BOX	STS304	1		t=1.5
품번 NO.	부품 번호 PART NO.	품 명 DESCRIPTION	재 질 MATERIAL	수량 Q'TY	중량 WT	비 고 REMARKS

승인 APP	재질 MAT'L	명 칭 TITLE	BATTERY BOX ASS'Y 1
검도 CHK	총중량 G.W		
설계 DGN	일반공차 MC WD CT	도면 번호 DRG. NO	MS BA68A000-000 Ver. 00 Rev. A1
제도 DRG	SIZE A1	SCALE 1/5	매수 SHEET . of .

OH SUNG M&E CO.,LTD.

2012 1000 전기기설치 년-PRJT 정리번호

기호 MARK	일자 DATE	변경내역 DETAIL OF REVISION(E.C ZONE)	설변번호 E.C NO.	설계 DGN	검도 CHK	승인 APP
△x1	14.03.10	지시선 23번 추가		Park.K.S		
△x5	12.11.01	승인도면에 의거 EARTH PAD 추가		Lim.j.s		

참고번호 REF. NO.

두께			
절삭가공 MACHINING	~ 40	2	4
	~ 30	2	3
	~ 10	1	1.5
	< 3	0.5	1
직각도	~3150	-	7
	~1600	4	5
	~ 800	3	4
	~ 400	2	3
	~ 200	1.5	2
	~ 100	1	1.5
등급 GRADE		A	B
주물 주강품 CASTING (±)			
~ 20M	8	14	24
~ 15M	7	12	21
~ 12M	6	10	18
~ 8M	5	8	14
~ 4M	4	6	11
~ 2M	3	4	8
~ 1M	2	3	6
~ 315	1	2	4
~ 120	1	2	3
~ 30	1	1	1
등급 GRADE	A	B	C
용접 구조물 WELDING (±)			
~ 20M	-	6.0	8.0
~ 15M	-	5.0	7.0
~ 12M	-	4.0	6.0
~ 8M	-	3.0	5.0
~ 4M	0.8	2.0	4.0
~ 2M	0.5	1.2	3.0
~ 1M	0.3	0.8	2.0
~ 315	0.2	0.5	1.2
~ 120	0.15	0.3	0.8
~ 30	0.1	0.2	0.5
3~6	0.05	0.1	0.2
등급 GRADE	A	B	C
기계 가공품 MACHINING (±)			
금형제품은 별도공차를 GENERAL TOLERANCE			

본 도면은 상기 제안으로서 허가없이 무단복사/배포 금지함. PROPERTY OF ISSUING ENTITY. CANNOT BE DISTRIBUTED OR REPRODUCED WITHOUT AUTHORIZATION.

CAD